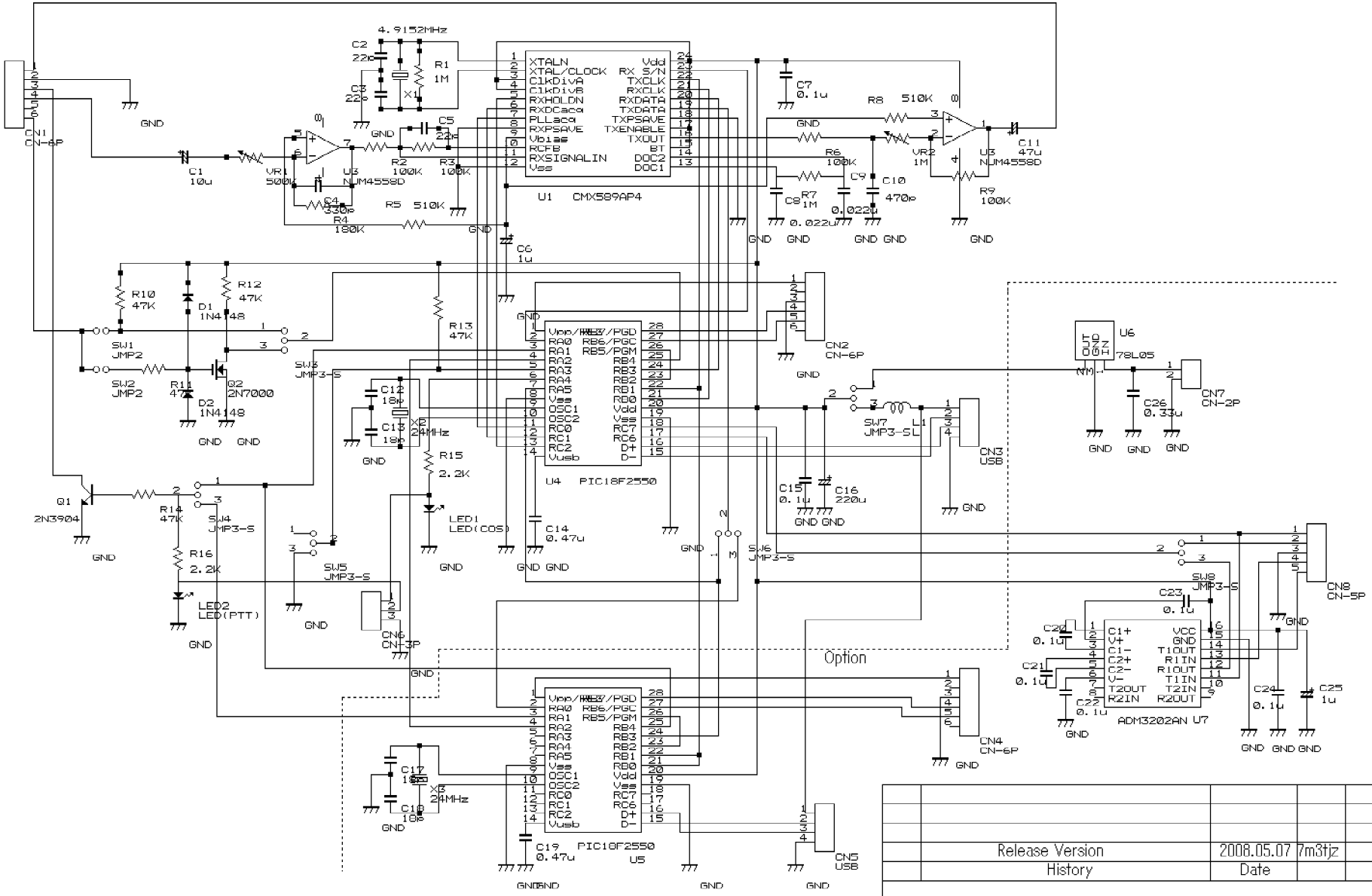

	Release Version	2008.05.07	7m3tjz	
	History	Date		Remarks

Title Node Adapter		Number	
	Size	Revision V02.05	Page